EXHIBIT M

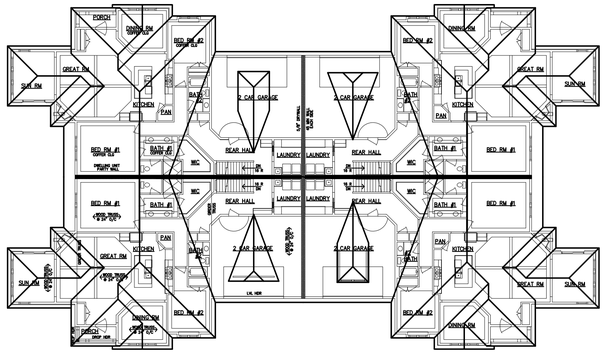

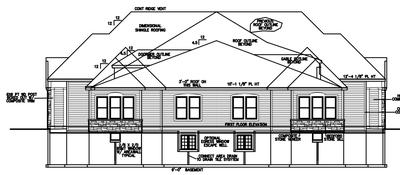

LEFT AND RIGHT SIDE ELEVATION
1/8" = 1'-0"

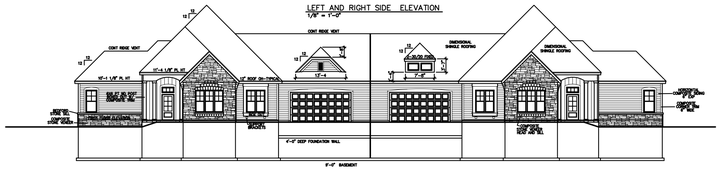

FRONT & REAR ELEVATION
1/8" = 1'-0"

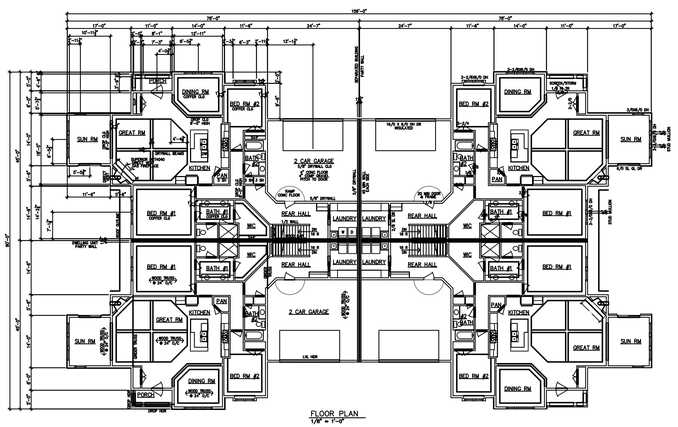

FLOOR PLAN
1/8" = 1'-0"

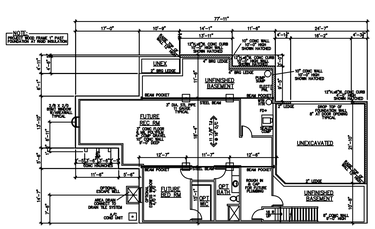

UNIT BASEMENT PLAN
1/8" = 1'-0"

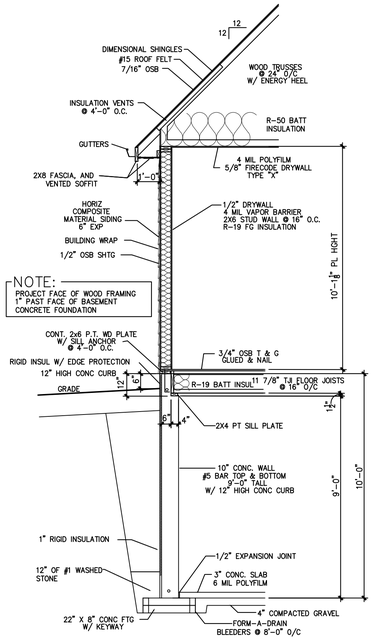

1 CURBED WALL SECTION
3/8" = 1'-0"

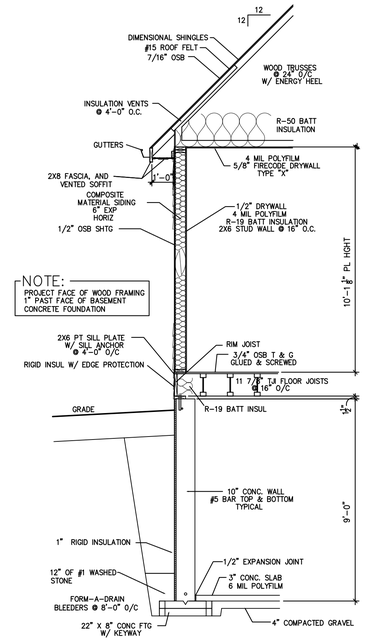

2 TYPICAL WALL SECTION
3/8" = 1'-0"

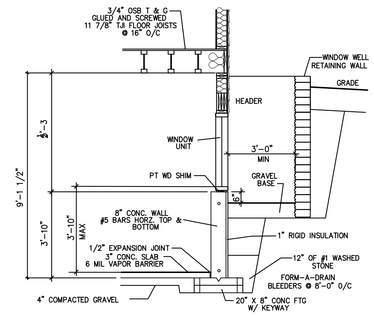

3 LOOKOUT DETAIL
3/8" = 1'-0"

NOTE: SETBACK FACE OF WOOD FRAMING 2" PAST FACE OF BASEMENT CONCRETE FOUNDATION

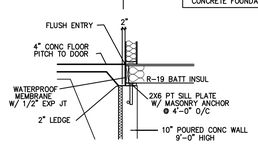

4 GARAGE WALL DTL
3/8" = 1'-0"

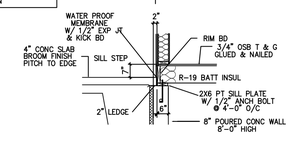

5 PORCH WALL DTL
3/8" = 1'-0"

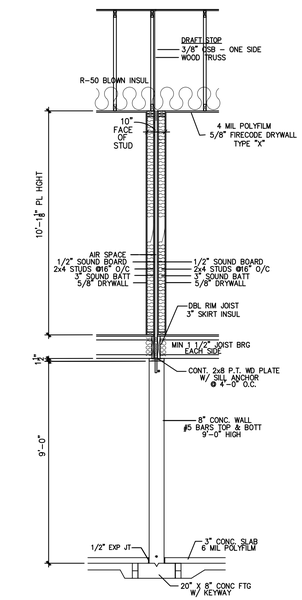

6 DWELLING UNIT SEPARATION WALL SECTION
3/8" = 1'-0"

NOTE: 36" WIDE ICE & WATER SHIELD AT EAVES AND VALLEYS

NOTE: HURRICANE HOLD DOWN ON ALL TRUSSES

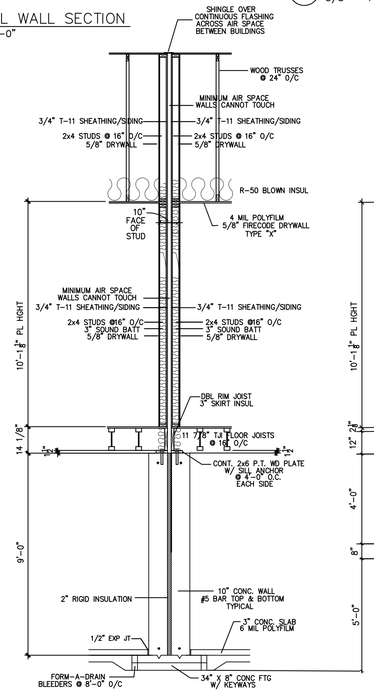

7 DUPLEX BUILDING SEPARATION WALL SECTION
3/8" = 1'-0"

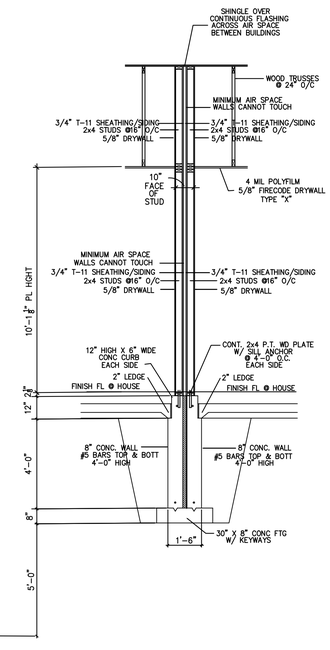

8 DUPLEX BUILDING SEPARATION GARAGE WALL SECTION
3/8" = 1'-0"